This Drg is the Property of Larsen & Toubro Limited, ECC Construction Group and must not be passed on to any third person or firm not authorised by us, nor be copied/made use of in full or part by such person or firm without our prior permission in Writing

TABLE – 1

Pipe dia (mm)	Pipe OD (mm)	Angle (degrees)	A (mm)	B (mm)	C (mm)	D (mm)	E (mm)	F (mm)	G (mm)	H (mm)
Horizontal bend for DI-K7 pipe										
250	274	11.25	400	150	1250	720	530	574	150	150
		22.5	800	300	1250	720	530	574	150	150
		45	1500	550	1300	750	550	574	150	150
		90	2150	750	1200	697	503	774	250	250
300	326	11.25	500	225	1000	563	437	626	150	150
		22.5	1000	500	1000	556	444	626	150	150
		45	1750	600	1100	640	460	676	175	175
		90	2500	1400	1000	547	453	926	300	300
Horizontal bend for DI-K9 pipe										
150	170	11.25	350	150	1000	567	433	470	150	150
		22.5	550	250	1000	563	437	470	150	150
		45	950	500	1000	552	448	520	175	175
		90	1550	550	1000	579	421	570	200	200
200	222	11.25	400	175	1000	565	435	522	150	150
		22.5	800	375	1000	560	440	522	150	150
		45	1500	500	1000	583	417	572	175	175
		90	1850	600	1500	878	622	822	300	300
250	274	11.25	550	250	1000	563	437	574	150	150
		22.5	1150	550	1000	559	441	574	150	150
		45	1850	900	1500	836	664	624	175	175
		90	2250	1000	2500	1410	1090	874	300	300
Horizontal bend for HDPE pipe-6kg/cm2										
63	63	11.25	300	175	1000	544	456	363	150	150
		22.5	500	350	1000	529	471	363	150	150
		45	700	450	1000	536	464	363	150	150
		90	1000	600	1000	542	458	363	150	150
Horizontal bend for HDPE pipe-8kg/cm2										
63	63	11.25	300	175	1000	544	456	363	150	150
		22.5	500	350	1000	529	471	363	150	150
		45	600	325	1000	550	450	363	150	150
		90	700	350	1000	556	444	363	150	150
75	75	11.25	300	175	1000	544	456	375	150	150
		22.5	500	350	1000	529	471	375	150	150
		45	750	425	1000	546	454	375	150	150
		90	1350	750	1000	548	452	375	150	150
90	90	11.25	300	175	1000	544	456	390	150	150
		22.5	400	225	1000	547	453	390	150	150
		45	400	200	1000	556	444	390	150	150
		90	500	250	1000	556	444	390	150	150
110	110	11.25	300	200	1000	533	467	410	150	150
		22.5	500	350	1000	529	471	410	150	150
		45	600	325	1000	550	450	410	150	150
		90	800	400	1000	556	444	410	150	150
Horizontal bend for HDPE pipe-10kg/cm2										
63	63	11.25	300	175	1000	544	456	363	150	150
		22.5	400	225	1000	547	453	363	150	150
		45	500	275	1000	548	452	363	150	150
		90	700	300	1000	567	433	363	150	150
75	75	11.25	300	175	1000	544	456	375	150	150
		22.5	550	325	1000	543	457	375	150	150
		45	600	325	1000	550	450	375	150	150
		90	1200	625	1000	553	447	375	150	150
90	90	11.25	200	150	1000	524	476	390	150	150
		22.5	300	175	1000	544	456	390	150	150
		45	300	150	1000	556	444	390	150	150
		90	450	200	1000	564	436	390	150	150
110	110	11.25	250	150	1000	542	458	410	150	150
		22.5	300	150	1000	556	444	410	150	150
		45	500	200	1000	571	429	410	150	150
		90	625	250	1000	571	429	410	150	150
125	125	11.25	300	175	1000	544	456	425	150	150
		22.5	500	275	1000	548	452	425	150	150
		45	500	250	1000	556	444	425	150	150
		90	800	400	1000	556	444	425	150	150
140	140	11.25	300	175	1000	544	456	440	150	150
		22.5	400	200	1000	556	444	440	150	150
		45	550	200	1000	578	422	440	150	150
		90	1000	450	1000	563	437	440	150	150
Horizontal bend for HDPE pipe-12.5kg/cm2										
63	63	11.25	300	175	1000	544	456	363	150	150
		22.5	500	325	1000	535	465	363	150	150
		45	700	350	1000	556	444	363	150	150
		90	1000	500	1000	556	444	363	150	150
75	75	11.25	300	200	1000	533	467	375	150	150
		22.5	500	325	1000	535	465	375	150	150
		45	700	350	1000	556	444	375	150	150
		90	1600	900	1000	547	453	375	150	150
90	90	11.25	300	200	1000	533	467	390	150	150
		22.5	500	350	1000	529	471	390	150	150
		45	700	350	1000	556	444	390	150	150
		90	1600	900	1000	547	453	390	150	150
110	110	11.25	300	200	1000	533	467	410	150	150
		22.5	500	275	1000	548	452	410	150	150
		45	700	350	1000	556	444	410	150	150
		90	1500	800	1000	551	449	410	150	150
140	140	11.25	300	200	1000	533	467	440	150	150
		22.5	550	325	1000	543	457	440	150	150
		45	700	300	1000	567	433	440	150	150
		90	1000	500	1000	556	444	440	150	150

TABLE – 2

Pipe dia (mm)	Pipe OD (mm)	Angle (degrees)	A (mm)	B (mm)	C (mm)	D (mm)	E (mm)
Vertical upturn bend for DI-K7 pipe							
250	274	11.25	1000	600	574	150	150
		22.5	1000	600	574	150	150
		45	1000	600	574	150	150
300	326	11.25	1000	650	626	150	150
		22.5	1000	650	626	150	150
		45	1000	650	626	150	150
Vertical upturn bend for DI-K9 pipe							
150	170	11.25	1000	500	470	150	150
		22.5	1000	500	470	150	150
		45	1000	500	470	150	150
200	222	11.25	1000	550	522	150	150
		22.5	1000	550	522	150	150
		45	1000	550	522	150	150
250	274	11.25	1000	600	574	150	150
		22.5	1000	600	574	150	150
		45	1000	600	574	150	150
Vertical upturn bend for HDPE pipe-6kg/cm2							
63	63	11.25	1000	400	363	150	150
		22.5	1000	400	363	150	150
		45	1000	400	363	150	150
Vertical upturn bend for HDPE pipe-8kg/cm2							
63	63	11.25	1000	400	363	150	150
		22.5	1000	400	363	150	150
		45	1000	400	363	150	150
75	75	11.25	1000	400	375	150	150
		22.5	1000	400	375	150	150
		45	1000	400	375	150	150
90	90	11.25	1000	400	390	150	150
		22.5	1000	400	390	150	150
		45	1000	400	390	150	150
110	110	11.25	1000	450	410	150	150
		22.5	1000	450	410	150	150
		45	1000	450	410	150	150
Vertical upturn bend for HDPE pipe-10kg/cm2							
63	63	11.25	1000	400	363	150	150
		22.5	1000	400	363	150	150
		45	1000	400	363	150	150
75	75	11.25	1000	400	375	150	150
		22.5	1000	400	375	150	150
		45	1000	400	375	150	150
90	90	11.25	1000	400	390	150	150
		22.5	1000	400	390	150	150
		45	1000	400	390	150	150
110	110	11.25	1000	450	410	150	150
		22.5	1000	450	410	150	150
		45	1000	450	410	150	150
125	125	11.25	1000	450	425	150	150
		22.5	1000	450	425	150	150
		45	1000	450	425	150	150
140	140	11.25	1000	450	425	150	150
		22.5	1000	450	425	150	150
		45	1000	450	425	150	150
Vertical upturn bend for HDPE pipe-12.5kg/cm2							
63	63	11.25	1000	400	363	150	150
		22.5	1000	400	363	150	150
		45	1000	400	363	150	150
75	75	11.25	1000	400	375	150	150
		22.5	1000	400	375	150	150
		45	1000	400	375	150	150
90	90	11.25	1000	400	390	150	150
		22.5	1000	400	390	150	150
		45	1000	400	390	150	150
110	110	11.25	1000	450	410	150	150
		22.5	1000	450	410	150	150
		45	1000	450	410	150	150
140	140	11.25	1000	450	440	150	150
		22.5	1000	450	440	150	150
		45	1000	450	440	150	150

TABLE – 3

Pipe dia (mm)	Pipe OD (mm)	Angle (degrees)	A (mm)	B (mm)	C (mm)	D (mm)	E (mm)
Vertical downturn bend for DI-K7 pipe							
250	274	11.25	1000	600	574	150	150
		22.5	1250	800	574	150	150
		45	1850	1000	574	150	150
300	326	11.25	1000	625	626	150	150
		22.5	1300	1000	626	150	150
		45	2000	1150	626	150	150
Vertical downturn bend for DI-K9 pipe							
150	170	11.25	1000	500	470	150	150
		22.5	1000	500	470	150	150
		45	1300	650	670	250	250
200	222	11.25	1000	550	522	150	150
		22.5	1250	700	522	150	150
		45	1500	1050	622	200	200
250	274	11.25	1050	600	574	150	150
		22.5	1400	900	574	150	150
		45	1800	1200	674	200	200
Vertical downturn bend for HDPE pipe-6kg/cm2							
63	63	11.25	1000	400	363	150	150
		22.5	1000	400	363	150	150
		45	1000	400	363	150	150
Vertical downturn bend for HDPE pipe-8kg/cm2							
63	63	11.25	1000	400	363	150	150
		22.5	1000	400	363	150	150
		45	1000	400	363	150	150
75	75	11.25	1000	400	375	150	150
		22.5	1000	400	375	150	150
		45	1000	400	375	150	150
90	90	11.25	1000	400	390	150	150
		22.5	1000	400	390	150	150
		45	1000	400	390	150	150
110	110	11.25	1000	450	410	150	150
		22.5	1000	450	410	150	150
		45	1000	450	410	150	150
Vertical downturn bend for HDPE pipe-10kg/cm2							
63	63	11.25	1000	400	363	150	150
		22.5	1000	400	363	150	150
		45	1000	400	363	150	150
75	75	11.25	1000	400	375	150	150
		22.5	1000	400	375	150	150
		45	1000	400	375	150	150
90	90	11.25	1000	400	390	150	150
		22.5	1000	400	390	150	150
		45	1000	400	390	150	150
110	110	11.25	1000	450	410	150	150
		22.5	1000	450	410	150	150
		45	1000	450	410	150	150
125	125	11.25	1000	450	425	150	150
		22.5	1000	450	425	150	150
		45	1000	450	425	150	150
140	140	11.25	1000	450	440	150	150
		22.5	1000	450	440	150	150
		45	1000	450	440	150	150
Vertical downturn bend for HDPE pipe-12.5kg/cm2							
63	63	11.25	1000	400	363	150	150
		22.5	1000	400	363	150	150
		45	1000	400	363	150	150
75	75	11.25	1000	400	375	150	150
		22.5	1000	400	375	150	150
		45	1000	400	375	150	150
90	90	11.25	1000	400	390	150	150
		22.5	1000	400	390	150	150
		45	1000	400	390	150	150
110	110	11.25	1000	450	410	150	150
		22.5	1000	450	410	150	150
		45	1000	450	410	150	150
140	140	11.25	1000	450	440	150	150
		22.5	1000	450	440	150	150
		45	1000	450	440	150	150

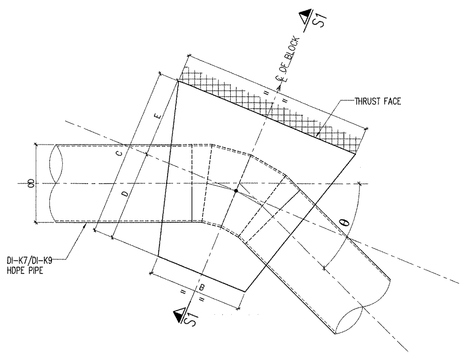

PLAN
(NUMERATION DETAIL OF THRUST BLOCK FOR HORIZONTAL BENDS REFER TABLE-1)

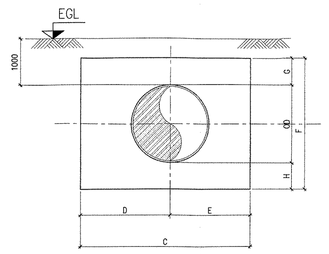

SECTION S1-S1
(NUMERATION DETAIL)

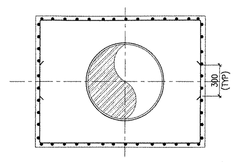

SECTION S1-S1
(RC DETAIL)

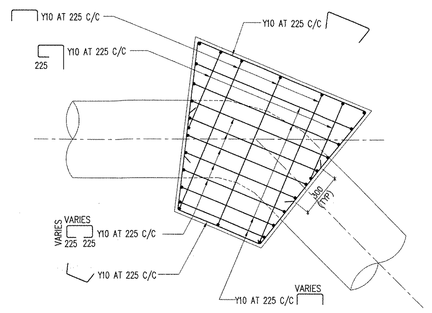

PLAN AT TOP FACE OF BLOCK
(RC DETAILS OF THRUST BLOCK FOR HORIZONTAL BENDS)

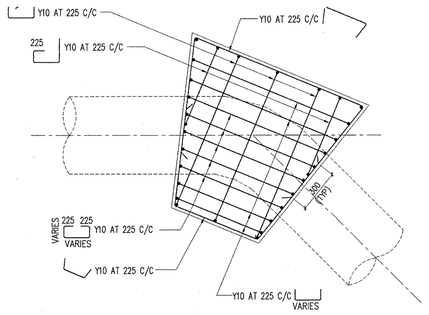

PLAN AT BOTTOM FACE OF BLOCK
(RC DETAILS OF THRUST BLOCK FOR HORIZONTAL BENDS)

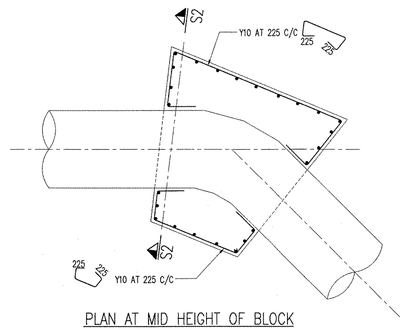

PLAN AT MID HEIGHT OF BLOCK
(RC DETAILS OF THRUST BLOCK FOR HORIZONTAL BENDS)

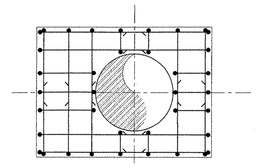

SECTION S2-S2
(RC DETAIL)

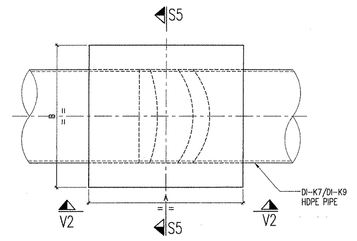

PLAN
(NUMERATION DETAIL OF THRUST BLOCK FOR VERTICAL DOWN-TURN BENDS REFER TABLE-3)

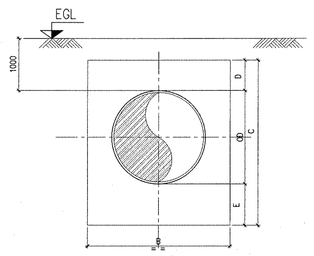

SECTION S5-S5
(NUMERATION DETAIL)

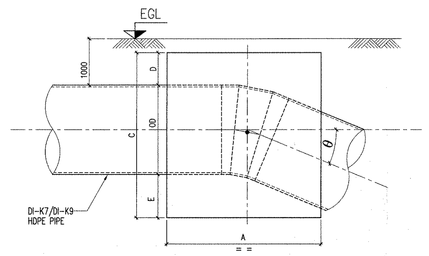

VIEW V2-V2
(NUMERATION DETAIL)

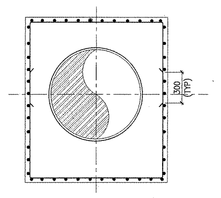

SECTION S5-S5
(RC DETAIL)

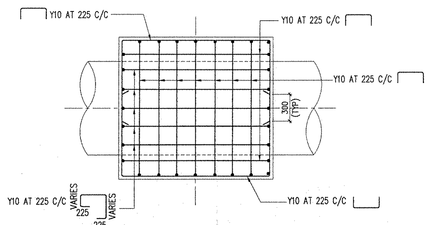

PLAN AT TOP FACE OF BLOCK
(R.C. DETAILS FOR VERTICAL DOWN-TURN BENDS)

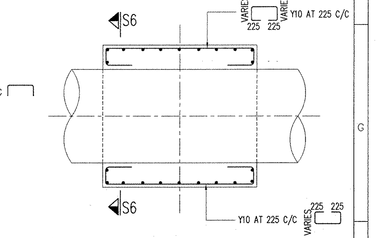

PLAN AT MID HEIGHT OF BLOCK
(RC DETAILS OF THRUST BLOCK FOR VERTICAL DOWN-TURN BENDS)

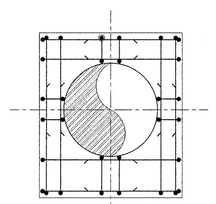

SECTION S6-S6
(RC DETAIL)

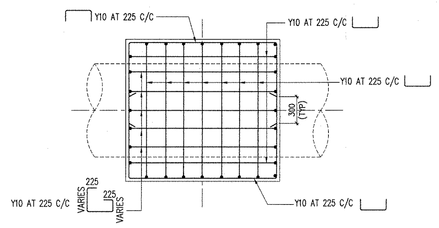

PLAN AT BOTTOM FACE OF BLOCK
(R.C. DETAILS FOR VERTICAL DOWN-TURN BENDS)

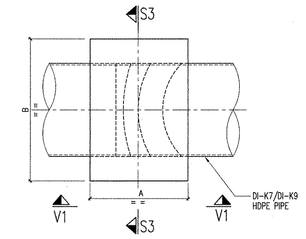

PLAN
(NUMERATION DETAIL OF THRUST BLOCK FOR VERTICAL UP-TURN BENDS REFER TABLE-2)

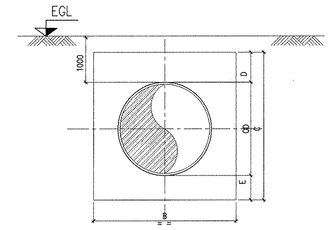

SECTION S3-S3
(NUMERATION DETAIL)

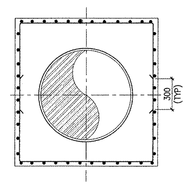

SECTION S3-S3
(RC DETAIL)

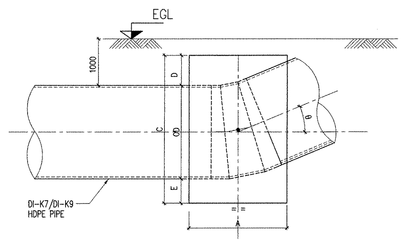

VIEW V1-V1
(NUMERATION DETAIL)

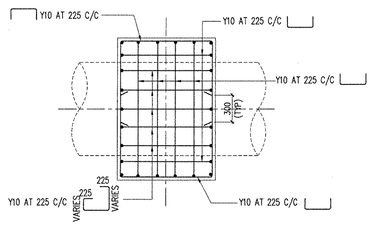

PLAN AT BOTTOM FACE OF BLOCK
(RC DETAILS FOR VERTICAL UP-TURN BENDS)

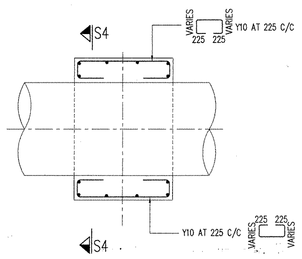

PLAN AT MID HEIGHT OF BLOCK
(RC DETAILS OF THRUST BLOCK FOR VERTICAL UP-TURN BENDS)

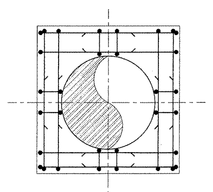

SECTION S4-S4
(RC DETAIL)

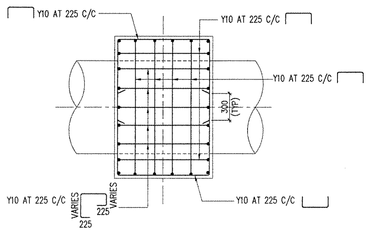

PLAN AT TOP FACE OF BLOCK
(RC DETAILS FOR VERTICAL UP-TURN BENDS)

LEGEND

EGL – EXISTING GROUND LEVEL
OD – OUTER DIAMETER

NOTES

1. ALL DIMENSIONS ARE IN MM AND LEVELS ARE IN METRES.
2. GRADE OF CONCRETE SHALL BE M20.
3. ALL REINFORCEMENT BARS SHALL BE HYSD BARS OF GRADE Fe 415 CONFORMING TO IS:1786 – 1985.
4. THRUST BLOCK SHALL BE CAST AGAINST THE UNDISTURBED FACE OF EXCAVATED TRENCH.
5. SOIL BENEATH AND BY THE SIDE OF THRUST BLOCK WHICH ULTIMATELY BEARS THRUST THROUGH CONCRETE MEDIUM MUST REMAIN UNDISTURBED. IN CASE OF ANY EXTRA EXCAVATION IS DONE IN TRENCHES BELOW THE BASE OF THRUST BLOCK AND THRUST FACE SIDE, THE GAP/DIFFERENCE SHALL BE FILLED WITH M15.
6. PIPE AND SPECIALS SHALL BE SUITABLY SUPPORTED WHILE CONCRETING THE THRUST BLOCK.
7. TESTING OF PUMPING MAIN SHALL BE DONE AFTER CASTING OF THRUST BLOCKS AND COMPACTION OF BACK FILLING.

REV.NO.	DESCRIPTION	DESIGNED	DRAWN	CHECKED	APPROVED
A	FOR APPROVAL	MR 28.10.16	JK 28.10.16	RR 28.10.16	MRJ 28.10.16

L&T Construction
Water & Effluent Treatment SBG

CLIENT : GOVERNMENT OF TELANGANA,SUPERINTENDING ENGINEER RURAL WATER SUPPLY ENGINEERING DEPARTMENT
CONSULTANT :
PROJECT : PROVIDING DRINKING WATER TO HABITATIONS IN KOMARAMBHEEM ASIFABAD SEGMENT IN ADILABAD DISTRICT
SUPPLIER / CONTRACTOR : L&T Construction Water & Effluent Treatment SBG

JOB No. : LE150883

	NAME	SIGN	DATE
DSGN	KRC		30.11.2016
DRWN	JK		30.11.2016
CHKD	RR		30.11.2016
APPD	MRJ		30.11.2016

TITLE : BELOW GROUND THRUST BLOCK FOR DI-K7/DI-K9/HDPE PIPE AT VEMENAPALLY
NUMERATION & RC DETAILS

SCALE 1:100
PROJECTION

CHECKED BY	SIGN	DATE
CIVIL & STRUCTURAL	–	–
PROCESS	–	–
MECHANICAL	–	–
ELECTRICAL	–	–
INSTRUMENTATION	–	–

DRG. No. LE15SB83-C-WS-CW-NR-3072 SIZE A0 REV A

RELEASED FOR ☐ PRELIMINARY ☐ TENDER ☐ INFORMATION ☑ APPROVAL ☐ CONSTRUCTION